Data Communication & Computer Networks

Protocols, Standards and OSI Model

Rathindra Nath Dutta

August 6, 2025

Birla Institute of Technology - Mesra

Protocols and Standards

Protocol

A protocol is a set of rules that govern data communications. A protocol defines what is communicated, how it is communicated, and when it is communicated.

Protocols and Standards

Protocol

A protocol is a set of rules that govern data communications. A protocol defines what is communicated, how it is communicated, and when it is communicated.

Key elements of a protocol:

- Syntax: structure/format of data
- Semantics: meaning/interpretation of different fields and what action to take
- Timing: synchronization, flow control

Protocols and Standards

Protocol

A protocol is a set of rules that govern data communications. A protocol defines what is communicated, how it is communicated, and when it is communicated.

Key elements of a protocol:

- Syntax: structure/format of data
- Semantics: meaning/interpretation of different fields and what action to take
- Timing: synchronization, flow control

Standards

It enforces compatibility among devices. Standards are essential in creating and maintaining an open and competitive market for equipment manufacturers. It guarantees national and international interoperability various network devices and processes.

Protocols and Standards

Protocol

A protocol is a set of rules that govern data communications. A protocol defines what is communicated, how it is communicated, and when it is communicated.

Key elements of a protocol:

- Syntax: structure/format of data
- Semantics: meaning/interpretation of different fields and what action to take
- Timing: synchronization, flow control

Standards

It enforces compatibility among devices. Standards are essential in creating and maintaining an open and competitive market for equipment manufacturers. It guarantees national and international interoperability various network devices and processes. Standards fall into two categories: *de facto* and *de jure*

Standards Organizations

- De facto standards: "by fact" or "by convention", adopted through widespread use, typically established by manufacturers
- De jure standards: "by law", legislated by an officially recognized body

Standards Organizations

- De facto standards: "by fact" or "by convention", adopted through widespread use, typically established by manufacturers
- De jure standards: "by law", legislated by an officially recognized body

Standards Creation Committees/government regulatory agencies:

- International Organization for Standardization (ISO)
- International Telecommunication Union (ITU)
- American National Standards Institute (ANSI)
- Institute of Electrical and Electronics Engineers (IEEE)
- Federal Communications Commission (FCC)
- European Telecommunications Standards Institute (ETSI)
- World Wide Web Consortium (W3C)
- Internet Engineering Task Force (IETF)
- ...

OSI Model

- In 1947, ISO established an open system (a set of protocols) for communication

OSI Model

- In 1947, ISO established an open system (a set of protocols) for communication
- The objective was to facilitate communication between different systems without requiring changes to the logic of the underlying hardware and software

OSI Model

- In 1947, ISO established an open system (a set of protocols) for communication
- The objective was to facilitate communication between different systems without requiring changes to the logic of the underlying hardware and software
- The proposed model is known as Open Systems Interconnection (OSI) model

OSI Model

- In 1947, ISO established an open system (a set of protocols) for communication
- The objective was to facilitate communication between different systems without requiring changes to the logic of the underlying hardware and software
- The proposed model is known as Open Systems Interconnection (OSI) model
- OSI model is a layered framework

OSI Model

- In 1947, ISO established an open system (a set of protocols) for communication
- The objective was to facilitate communication between different systems without requiring changes to the logic of the underlying hardware and software
- The proposed model is known as Open Systems Interconnection (OSI) model
- OSI model is a layered framework – has a stack of 7 layers

OSI Model

- In 1947, ISO established an open system (a set of protocols) for communication
- The objective was to facilitate communication between different systems without requiring changes to the logic of the underlying hardware and software
- The proposed model is known as Open Systems Interconnection (OSI) model
- OSI model is a layered framework – has a stack of 7 layers
- Each layer acts as an *interface* between the layer immediately above it and the layer immediately below it

Seven Layers of OSI Model

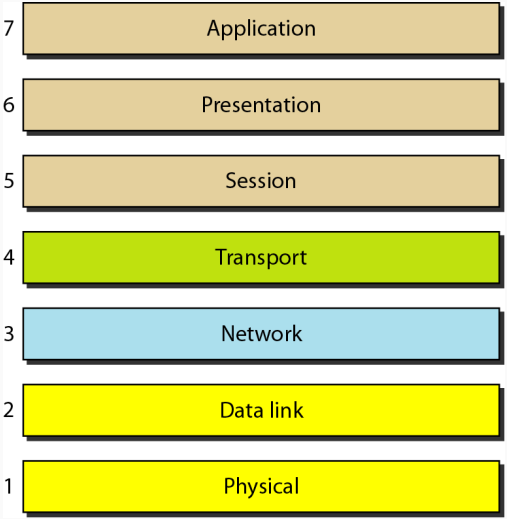

Data Exchange in OSI Model

- At each layer, a header (possibly a trailer) is added to the data unit
- Encapsulation/decapsulation is done at each layer

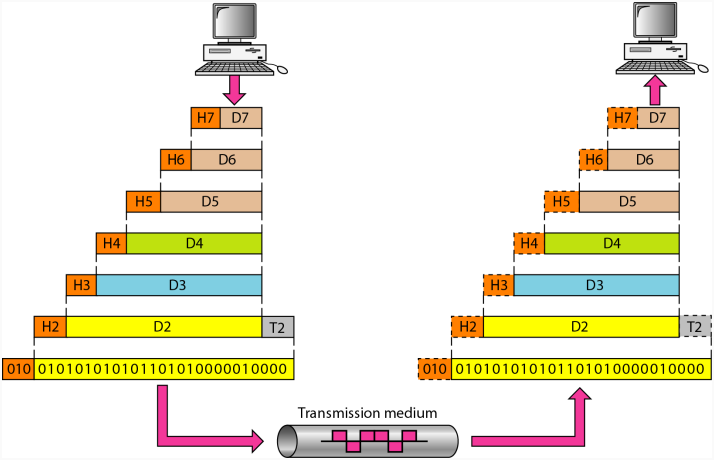

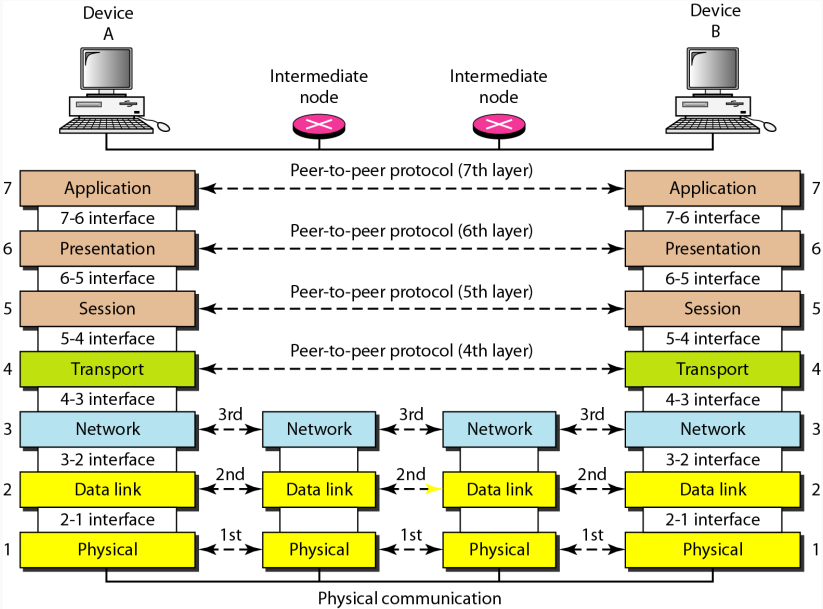
Device A
Device B
Intermediate node
Intermediate node
Peer-to-peer protocol (7th layer)
Peer-to-peer protocol (6th layer)
Peer-to-peer protocol (5th layer)
Peer-to-peer protocol (4th layer)
7 Application
7-6 interface
6 Presentation
6-5 interface
5 Session
5-4 interface
4 Transport
4-3 interface
3 Network
3-2 interface
2 Data link
2-1 interface
1 Physical
3rd
2nd
1st
Physical communication

Application Layer

- Top most layer, enables end user to access network
- User applications runs here

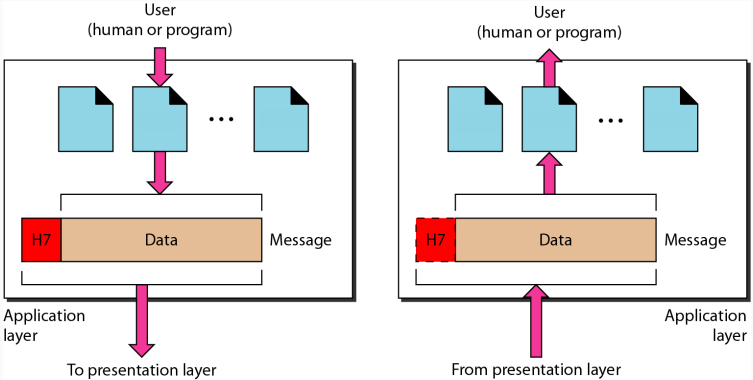

Application Layer

- Top most layer, enables end user to access network
- User applications runs here
- Common applications:
  - Web browsing: HTTP, HTTPS
  - File transfer: FTP, SFTP
  - Email Services: SMTP, POP3, IMAP
  - Remote login: Telnet, SSH
  - Directory Services: DNS, LDAP
  - ...

The Presentation Layer is concerned with the syntax and semantics of the information being exchanged between two systems. It acts as a data translator for the network.

Key Responsibilities:

Translation: It handles differences in data representation and encoding between systems. For example, it can convert data from one character encoding scheme (like ASCII) to another (like EBCDIC), ensuring interoperability.

Encryption: For security, this layer is responsible for encrypting data before it's transmitted and decrypting it upon receipt. Protocols like SSL (Secure Sockets Layer) and TLS (Transport Layer Security) operate here.

Compression: It can compress data to reduce the number of bits that need to be transmitted, which is especially useful for large multimedia files.

Presentation Layer

- Concerned with the syntax and semantics of the information exchanged
- Key responsibilities:
  - Translation: interoperability between these different encoding, formatting
  - Encryption: SSL, TLS
  - Compression: needed for multimedia

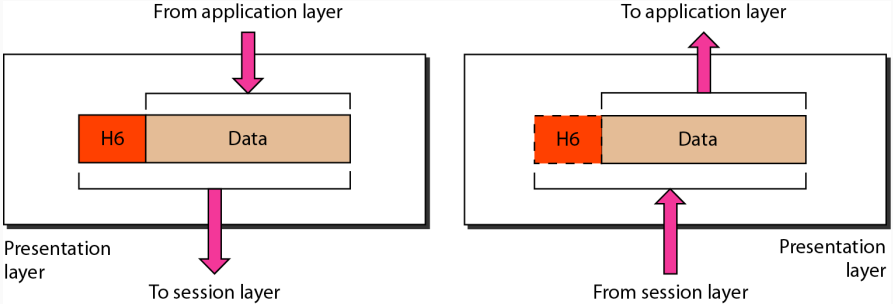

Session Layer

- Establishes, maintains, and synchronizes the interaction between two systems
- Key responsibilities:
  - Dialog discipline: full duplex or half duplex
  - Grouping: create logical grouping of data; indicate start/end of one group to aid application programs
  - Recovery: add checkpoints or synchronization points

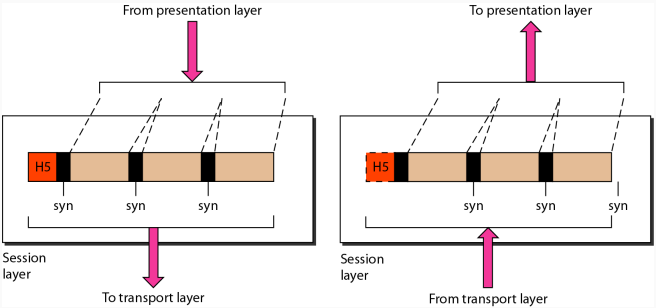

Dialog Discipline / Control: This function determines the mode of communication between systems. It can be full-duplex (data flows in both directions simultaneously) or half-duplex (data flows in only one direction at a time).

Grouping / Synchronization: This layer allows a stream of data to be grouped into logical units. It can add checkpoints or synchronization points to the data stream. If a failure occurs during a large transfer, the session can be resumed from the last checkpoint, preventing the need to restart the entire transfer from the beginning.

Recovery: Closely related to synchronization, this involves using the checkpoints to recover from failures efficiently.